N.I.S.T. H-44 REQUIRES THAT ON THE APPROACH ENDS OF THIS VEHICLE SCALE, THERE SHALL BE A STRAIGHT APPROACH AT LEAST HALF THE LENGTH OF THE PLATFORM, BUT NOT REQUIRED TO BE MORE THAN 40 FEET. NOT LESS THAN 10 FEET OF ANY APPROACH ADJACENT TO THE PLATFORM SHALL BE LEVEL AND CONSTRUCTED OF CONCRETE OR SIMILAR DURABLE MATERIAL. ANY SLOPE IN THE REMAINING PORTION OF THE APPROACH SHALL INSURE EASE OF VEHICLE ACCESS, EASE FOR TESTING PURPOSES, AND DRAINAGE AWAY FROM THE SCALE.

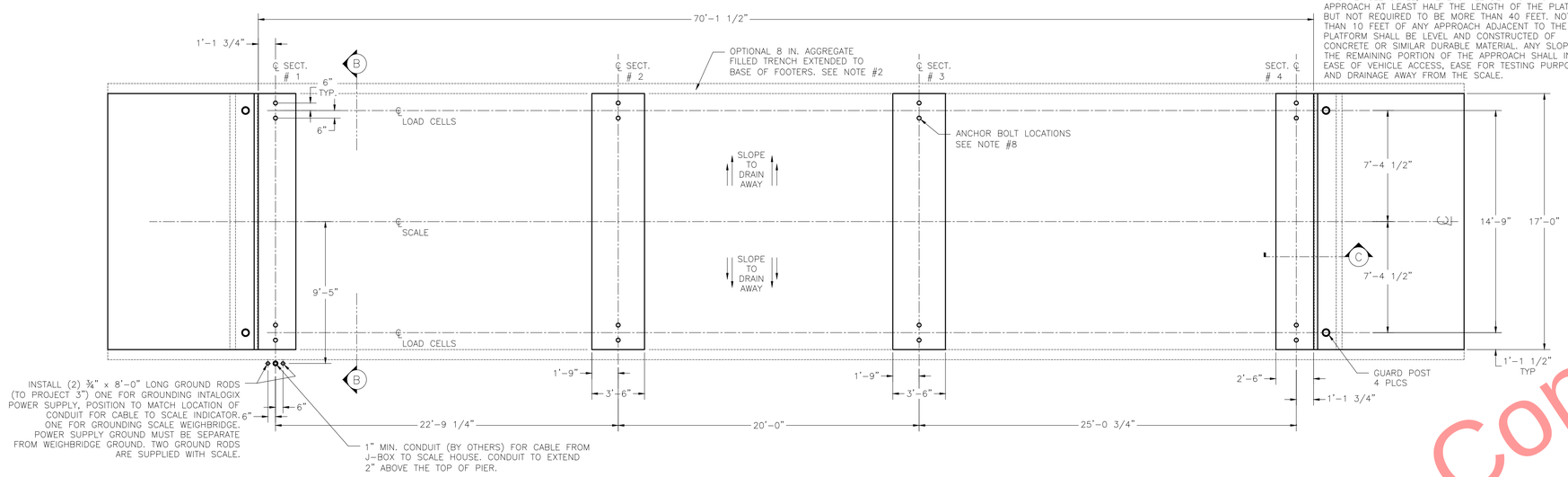


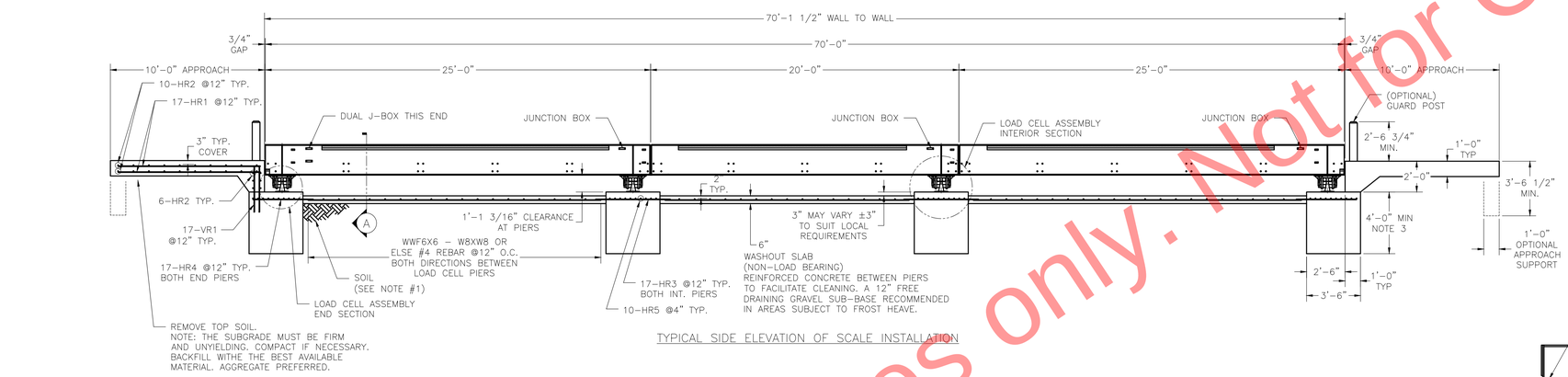


TYPICAL SIDE ELEVATION OF SCALE INSTALLATION

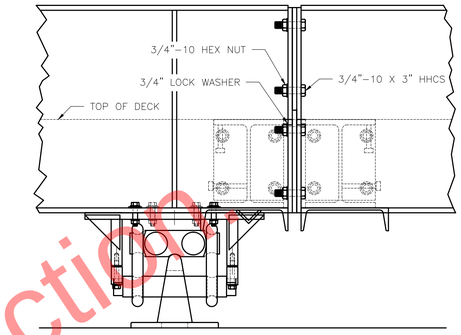


LOAD CELL ASSEMBLY INTERIOR SECTION
(4 FASTENERS PER CONNECTION)

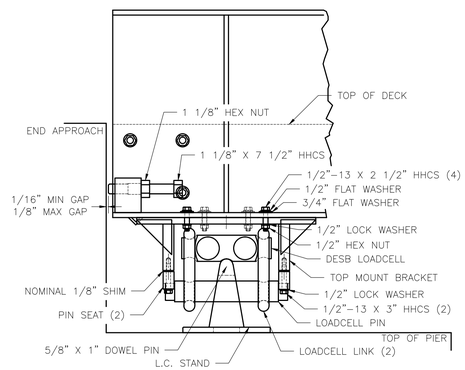


LOAD CELL ASSEMBLY END
SECTION W/ CHECKING DETAIL

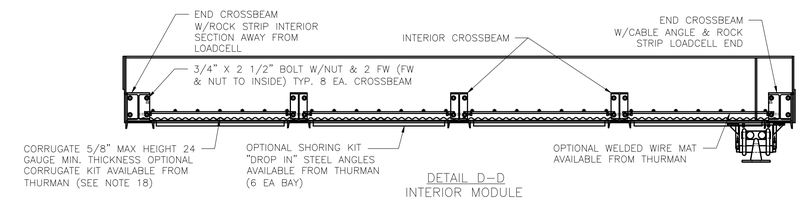


DETAIL D–D
INTERIOR MODULE
SHOWN

CONCRETE POURING & FINISHING INSTRUCTIONS FOR SCALE DECK:

1. FINISH THE CONCRETE DECK WITH A BULL FLOAT AND HAND TROWEL OR BROOM TO THE DESIRED FINISH.
2. THE CONCRETE IS TO BE MOIST CURED FOR SEVEN DAYS OR MAY ALTERNATIVELY RECEIVE A COAT OF LIQUID CURING COMPOUND.
3. DO NOT USE OR CALIBRATE THE SCALE UNTIL THE DECK IS CURED AND HAS REACHED 4000 PSI MINIMUM COMPRESSIVE STRENGTH.

FOUNDATION CONCRETE
4000 PSI MINIMUM

| LOCATION | QTY (CU. YDS) |
|---|---|
| PIERS AS SHOWN | 35.5 |
| FLOOR AT 6" THICK | 18.5 |
| APPROACHES | 14.5 |
| MODULES | 31.5 |
| TOTAL CONCRETE | 100 CU. YDS. |

MODULE REINFORCING SCHEDULE
ASTM 615 – GRADE 60

| MARK | QTY | SIZE | LENGTH | WEIGHT (LBS) | REMARKS |
|---|---|---|---|---|---|
| D1 | 98 | #6 | 14'-6" | 2135 | (7) EA. BAY, PERPENDICULAR TO TRAFFIC |
| D2 | 224 | #6 | 4'-6" | 1515 | (16) EA. BAY, PARALLEL TO TRAFFIC |
| | | | TOTAL WEIGHT | 3,650 | |

FOUNDATION REINFORCING SCHEDULE
ASTM 615 – GRADE 60

| MARK | QTY | SIZE | LENGTH | WEIGHT (LBS) | REMARKS |
|---|---|---|---|---|---|
| HR1 | 68 | #4 | 9'-6" | 432 | (34) EA. APPROACH |
| HR2 | 52 | #4 | 16'-6" | 574 | (26) EA. APPROACH |
| HR3 | 34 | #4 | 4'-10" | 110 | (17) EA. INT. PIER |
| HR4 | 34 | #4 | 3'-11" | 89 | (17) EA. END PIER |
| HR5 | 40 | #5 | 16'-6" | 689 | (10) EA. PIER |
| VR1 | 68 | #4 | 3'-0" | 137 | (34) EA. END WALL VERT. |
| | | | TOTAL WEIGHT | 2,031 | |

*PLUS APPROX. 1,000 SQ. FT. OF WWF OR EQUAL AS NOTED IN ELEVATION VIEW

REINFORCING STEEL NOTES:

1. REINFORCING STEEL SHALL BE FREE OF ALL MUD, DEBRIS, CEMENT GROUT, LOOSE RUST, GREASE, AND OIL.
2. TACK WELDING OF BARS IS PROHIBITED.

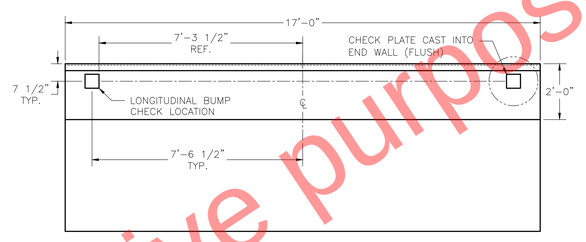


SECTION B–B

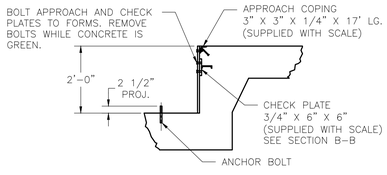


SECTION C–C

| DRILL TYPE ANCHOR INFORMATION (DRILL TYPE ANCHORS PROVIDED WITH THE SCALE) |
|---|
| FOR THE LC STANDS (16 REQUIRED)<br>5/8 DIA X 6" STUD TYPE ANCHORS<br>DRILL DIA 5/8", DRILL DEPTH 3 1/2" |

ANCHOR DETAIL

NOTES:
1. FOUNDATION DESIGN IS BASED ON A MINIMUM SOIL BEARING CAPACITY OF 3000 LB/SQ. FT. FOR SOIL CONDITIONS WHICH DO NOT MEET THIS SPECIFICATION, CONSULT WITH THE THURMAN SCALE COMPANY.
2. THE FOUNDATION SHALL BE INSTALLED AT AN ELEVATION AND LOCATION TO INSURE ADEQUATE DRAINAGE AWAY FROM SCALE. A PERIMETER TRENCH AND AGGREGATE BASE MAY BE ADDED IF DRAINAGE IS NOT SUFFICIENT TO MAINTAIN 3000 LB/SQ. FT. BEARING CAPACITY.
3. BOTTOM OF FOOTERS SHOULD EXTEND 12" BELOW THE FROST LINE. AN 48 INCH FOOTER DEPTH IS MINIMUM.
4. N.I.S.T. H-44 REQUIREMENTS AND LOCAL WEIGHTS AND MEASURES REGULATIONS MAY REQUIRE INSTALLATION PARAMETERS SOMEWHAT DIFFERENT THAN ILLUSTRATED ON THIS PLAN. IN ORDER TO INSURE COMPLIANCE, CONSULT THE LOCAL WEIGHTS & MEASURES OFFICE PRIOR TO CONSTRUCTION.
5. CONCRETE OF 4000 PSI MINIMUM COMPRESSIVE STRENGTH IS REQUIRED, WITH 5–7% AIR ENTRAINMENT. VIBRATE CONCRETE WHEN POURING. FOLLOW LATEST ACI REQUIREMENTS FOR MATERIALS AND CONSTRUCTION. DO NOT CAST UNLESS TEMPERATURE IS ABOVE 40 DEGREES FAHRENHEIT.
6. PIERS MUST BE LEVEL AND IN THE SAME PLANE WITHIN ±1/8 INCH.
7. EXCAVATION, FORMS, REINFORCING STEEL, GUARD POSTS, AND CONCRETE FURNISHED BY OTHERS. OPTIONAL REBAR KITS (FOR THE SCALE DECK) ARE AVAILABLE FROM THURMAN
8. DO NOT PLACE REBAR IN CLOSE PROXIMITY OF ANCHOR BOLTS.
9. A MINIMUM OF 24" OF CLEARANCE IS REQUIRED ON JUNCTION BOX SIDE OF THE SCALE NEAR THE BOX MOUNTS.
10. CAUTION! THE MAIN GIRDERS SHOULD NEVER BE USED AS A STEP. SLIPPERY WHEN WET.

ASSEMBLY
11. POSITION LOAD CELL ASSEMBLIES IN APPROXIMATE LOCATIONS.
12. ASSEMBLE THE GIRDERS W/ THE CHECK BLOCK AND PROVISION FOR 2 LC FIRST. LAYOUT GIRDERS & LOOSELY ATTACH CROSSBEAMS. CROSS-SQUARE AND TIGHTEN BOLTS. JACK UP & ATTACH TOP BRACKETS & PIN SEATS TO THE BOTTOM FLANGE OF THE GIRDERS.
13. SET THE LOADCELL ASSY UNDER THE PIN SEATS OF THE BASE MODULE.
14. ASSEMBLE REMAINING MODULES BUILDING FROM THE BASE MODULE. PLACE NEXT PAIR OF GIRDERS ON STEP PLATE OF BASE MODULE & ON LOADCELL ASSY. INSTALL THE MODULE CONNECTION BOLTS THROUGH THE CONNECTION JOINT. LOOSELY ATTACH CROSSBEAMS. REPEAT UNTIL ALL MODULES ARE BUILT.
15. CHECK SQUARENESS OF THE SCALE & ADJUST IF NECESSARY TO BRING INTO SQUARE. MAINTAIN EQUAL DISTANCE TO PIT WALL AT EACH END.
16. TIGHTEN ALL CROSSBEAM BOLTS ONE-HALF TURN PAST SNUG. TIGHTEN ALL MODULE CONNECTION BOLTS. SET LONGITUDINAL CHECK BOLTS. ANCHOR STANDS AFTER LOADCELL ASSY PLUMB.

DECK REINFORCEMENT
17. TO PREVENT PAN FROM SAGGING WHILE POURING, ADDITIONAL SHORING SUPPORT BENEATH THE CORRUGATED PAN IS REQUIRED. THURMAN OFFERS OPTION SHORING KIT FOR THIS PURPOSE.
18. CORREGATED PAN SHOULD HAVE THE FOLLOWING MINIMUM SPECIFICATIONS: THICKNESS: 24 GAUGE MIN, PITCH: 2 1/2", HEIGHT: 5/8" MAX CUT TO LENGTH: 7'-0" X 2'-6"
19. IF SUPPLIED WITH OPTIONAL REBAR MAT, TIE ABOVE STUDS. IF REINFORCEMENT SUPPLIED BY OTHERS, FOLLOW REBAR SCHEDULE.
20. POUR CONCRETE. SEE NOTE 5 ABOVE.

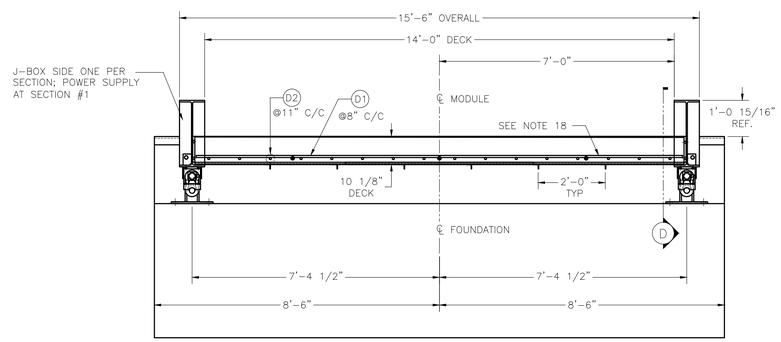


SECTION A–A

THIS DRAWING IS SUPPLIED AS CHECKED BELOW:
- ☒ REFERENCE (ESTIMATES ONLY, NOT FOR CONSTRUCTION)
- ☐ CERTIFIED FOR CONSTRUCTION, THURMAN SERIAL#
  CUSTOMER:
  CUSTOMER P.O.# DATE:
- ☐ CUSTOMER APPROVAL, RETURN ONE COPY.
  (ORDER ON HOLD UNTIL SIGNED COPY IS RETURNED)
  - ☐ APPROVED AS DRAWN, APPROVED BY: DATE:
  - ☐ APPROVED AS NOTED, APPROVED BY: DATE:

REVISIONS

| REV | BY | DATE | DESCRIPTION |
|---|---|---|---|
| 1 | JCR | 3/31/2015 | UPDATED TITLE BLOCK, DRAFTING STANDARDS, BEAM SIZES, & ADDED OVERALL WIDTH DIMENSION TO SECTION A–A |

THE INFORMATION CONTAINED HEREIN AND IN ANY ACCOMPANYING DOCUMENTS IS THE PROVILEGED AND CONFIDENTIAL PROPERTY OF THURMAN. DO NOT USE, COPY, DISCLOSE, TRANSFER, OR REPRODUCE WITHOUT WRITTEN PERMISSION. THURMAN SCALE ASSUMES NO RESPONSIBILITY OR LIABILITY TO THIS DOCUMENT AFTER ORIGINAL TRANSMISSION.

UNLESS OTHERWISE SPECIFIED, DIMENSIONS IN INCHES, AND TOLERANCES ARE AS FOLLOWS:
FRACTIONS ±1/8"
2-PLACE DECIMAL ±0.005
3-PLACE DECIMAL ±0.005
HOLE DIAMETERS ±1/32"
THIRD ANGLE

8530KD 90K CLC 70' X 14'
FOUNDATION DRAWING (FOOTINGS)
4 SECTION, DESB LOAD CELLS
(STATE OF IOWA COMPLIANT)

MODEL: 8530KD

THURMAN SCALE
COLUMBUS, OH
SCALE: NTS | DRAWN: JCR | CHECKED:
SHEET: 1 OF 1 | DATE: 05/02/11 | APPROVED:
DRAWING NUMBER: 92474-FT-IA | REV. 1

Illustrative purposes only. Not for Construction