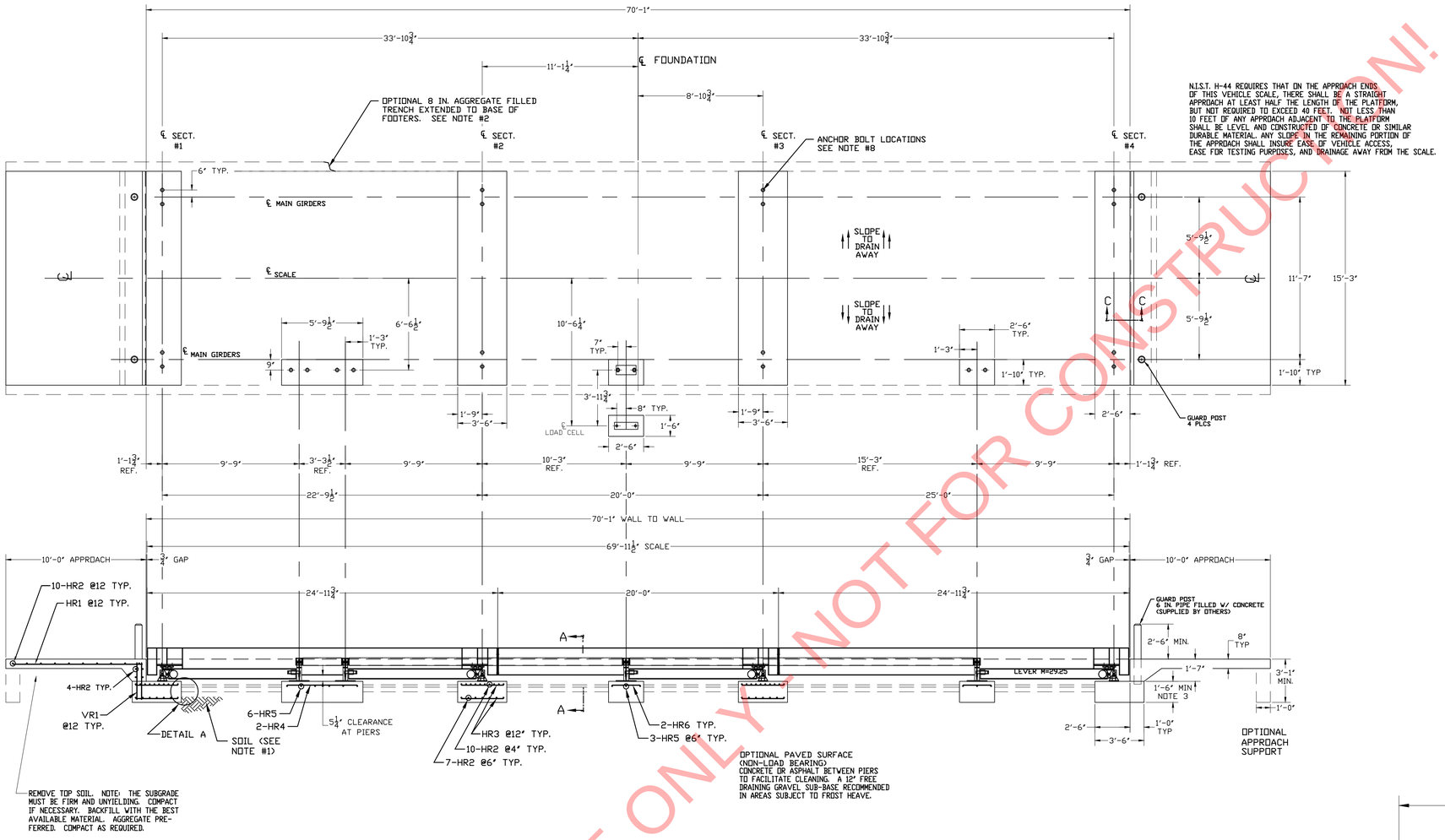

TYPICAL SIDE ELEVATION OF SCALE INSTALLATION

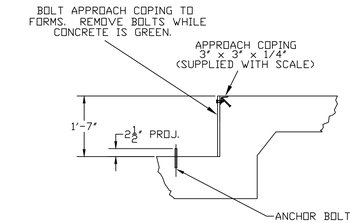

SECTION C-C

DRILL TYPE ANCHOR INFORMATION (DRILL TYPE ANCHORS PROVIDED WITH THE SCALE)
FOR THE CORNER STANDS (16 REQUIRED) FOR THE FULCRUM & LC STANDS (10 REQUIRED) 5/8 DIA X 6" STUD TYPE ANCHORS DRILL DIA 5/8", DRILL DEPTH 3 1/2"

ANCHOR DETAIL

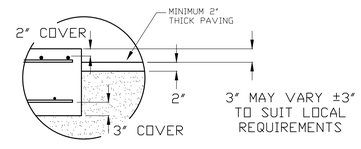

"DETAIL A"

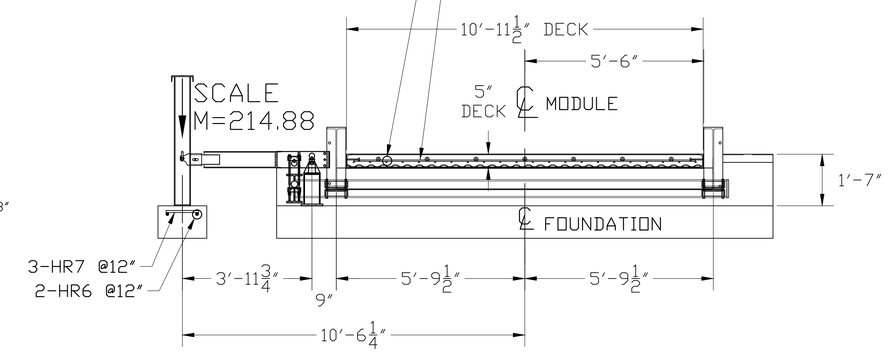

SECTION A-A

NOTES:

1. FOUNDATION DESIGN IS BASED ON A MINIMUM SOIL BEARING CAPACITY OF 3000 LB/SQ. FT. FOR SOIL CONDITIONS WHICH DO NOT MEET THIS SPECIFICATION, CONSULT WITH THE THURMAN SCALE COMPANY.
2. THE FOUNDATION SHALL BE INSTALLED AT AN ELEVATION AND LOCATION TO INSURE ADEQUATE DRAINAGE AWAY FROM SCALE. A PERIMETER TRENCH AND AGGREGATE BASE MAY BE ADDED IF DRAINAGE IS NOT SUFFICIENT TO MAINTAIN 3000 LB/SQ. FT. BEARING CAPACITY.
3. BOTTOM OF FOOTERS SHOULD EXTEND BELOW THE FROST LINE. AN 18 INCH FOOTER DEPTH IS MINIMUM.
4. N.I.S.T. H-44 REQUIREMENTS AND LOCAL WEIGHTS AND MEASURES REGULATIONS MAY REQUIRE INSTALLATION PARAMETERS SOMEWHAT DIFFERENT THAN ILLUSTRATED ON THIS PLAN. IN ORDER TO INSURE COMPLIANCE, CONSULT THE LOCAL WEIGHTS & MEASURES OFFICE PRIOR TO CONSTRUCTION.
5. CONCRETE OF 4000 PSI MINIMUM COMPRESSIVE STRENGTH IS REQUIRED, WITH 5-7% AIR ENTRAINMENT. VIBRATE CONCRETE WHEN POURING. FOLLOW LATEST ACI REQUIREMENTS FOR MATERIALS AND CONSTRUCTION. DO NOT CAST UNLESS TEMPERATURE IS ABOVE 40 DEGREES FAHRENHEIT.
6. PIERS MUST BE LEVEL AND IN THE SAME PLANE WITHIN ±1/8 INCH.
7. EXCAVATION, FORMS, REINFORCING STEEL, GUARD POSTS, AND CONCRETE FURNISHED BY OTHERS.
8. DO NOT PLACE REBAR IN CLOSE PROXIMITY OF ANCHOR BOLTS.

MODULE REBAR SCHEDULE
ASTM A615 GRADE 60

MODULE	MARK	QTY.	SIZE	LENGTH	WT.	REMARKS
20'x11'	D1	21	#4	10'-6"	148	(21) EA. MODULE LAT.
	D2	22	#4	19'-6"	287	(22) EA. MODULE LONG.
25'x11'	D1	52	#4	10'-6"	365	(26) EA. MODULE LAT.
	D2'	44	#4	24'-6"	721	(22) EA. MODULE LONG.
				TOTAL WT.	1521	

FOUNDATION REBAR SCHEDULE
ASTM A615 GRADE 60

MARK	QTY.	SIZE	LENGTH	WT.	REMARKS
HR1	32	#4	9'-6"	204	(16) EA. APPROACH LONG.
HR2	96	#4	15'-0"	962	(14) EA. APPROACH LAT; (17) EA. PIER LAT.
HR3	128	#4	3'-0"	257	(32) EA. PIER LONG.
HR4	2	#4	5'-0"	7	(2) DUAL FULCRUM PIER LONG.
HR5	12	#4	1'-4"	11	(3) EA. FULCRUM PIER LAT.
HR6	6	#4	2'-0"	9	(2) EA. FULCRUM PIER & LC PIER LONG.
HR7	3	#4	1'-0"	3	(3) LC PIER LAT.
VR1	64	#4	2'-9"	118	(32) EA. END WALL VERTICAL
		TOTAL WT.		1571	

CONCRETE REQUIREMENTS
4000 PSI

AREA	QTY. (CU. YDS.)
PIERS AS SHOWN	12
APPROACHES	9.5
FLOOR AT 2" THICK	6
MODULES	14.5
OPTIONAL APPROACH SUPPORTS	3
TOTAL	45.0

REINFORCING STEEL NOTES:

1. REINFORCING STEEL SHALL BE FREE OF ALL MUD, DEBRIS, CEMENT GROUT, LOOSE RUST, GREASE, AND OIL.
2. TACK WELDING OF BARS IS PROHIBITED.

THIS DRAWING IS SUPPLIED AS CHECKED BELOW:
☒ REFERENCE (ESTIMATES ONLY, NOT FOR CONSTRUCTION)
☐ CERTIFIED FOR CONSTRUCTION, THURMAN #
CUSTOMER:
CUSTOMER P.O.# DATE:
☐ CUSTOMER APPROVAL, RETURN ONE COPY.
(ORDER ON HOLD UNTIL SIGNED COPY IS RETURNED)
☐ APPROVED AS DRAWN, APPROVED BY: DATE:
☐ APPROVED AS NOTED, APPROVED BY: DATE:

THE MATERIAL AND INFORMATION CONTAINED HEREIN IS CONFIDENTIAL AND IS THE PROPERTY OF THURMAN SCALE COMPANY AND IS NOT TO BE USED, DISCLOSED, COPIED, TRANSFERRED, OR REPRODUCED WITHOUT THE PRIOR WRITTEN PERMISSION OF THURMAN SCALE COMPANY.

UNLESS OTHERWISE SPECIFIED: DIMENSIONS ARE IN INCHES
TOLERANCES: FRACTIONS ±1/8"
ANGLES ±1°
3-PLACE DECIMAL ±0.005
2-PLACE DECIMAL ±0.05
HOLE DIAMETERS ±1/32"

MATERIAL	FINISH
A36	N/A

LET	BY	DATE	REVISION

THURMAN SCALE
COLUMBUS, OH

8130 60K CLC
70' X 11' FOOTINGS
FOUNDATION (4 SECTION)

DATE: 10/23/12
SCALE: N/A
SHEET 1 OF 1
DRAWN BY: JCR
MODEL:
CHECKED BY: JC
APPROVED BY: JC
DRAWING NUMBER: 92489-FT
REVISION: 0

NOT FOR CONSTRUCTION!
FOR REFERENCE ONLY - NOT FOR CONSTRUCTION!