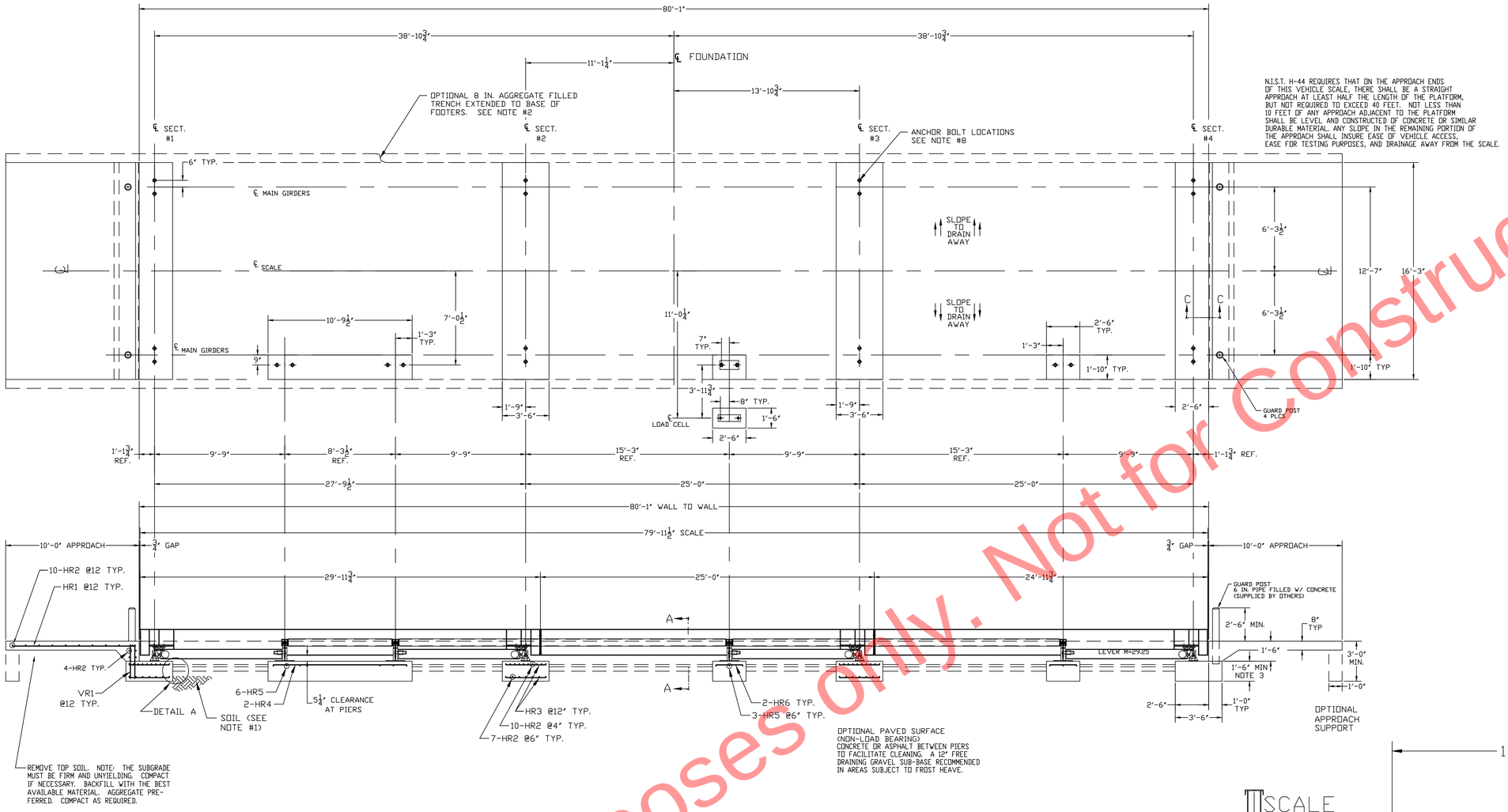

N.I.S.T. H-44 REQUIRES THAT ON THE APPROACH ENDS OF THIS VEHICLE SCALE, THERE SHALL BE A STRAIGHT APPROACH AT LEAST HALF THE LENGTH OF THE PLATFORM, BUT NOT REQUIRED TO EXCEED 40 FEET. NOT LESS THAN 10 FEET OF ANY APPROACH ADJACENT TO THE PLATFORM SHALL BE LEVEL AND CONSTRUCTED OF CONCRETE OR SIMILAR DURABLE MATERIAL. ANY SLOPE IN THE REMAINING PORTION OF THE APPROACH SHALL INSURE EASE OF VEHICLE ACCESS, EASE FOR TESTING PURPOSES, AND DRAINAGE AWAY FROM THE SCALE.

TYPICAL SIDE ELEVATION OF SCALE INSTALLATION

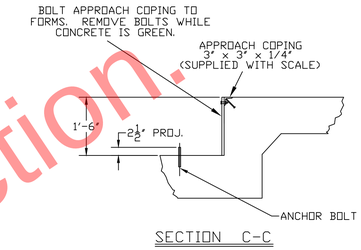

SECTION C-C

DRILL TYPE ANCHOR INFORMATION (DRILL TYPE ANCHORS PROVIDED WITH THE SCALE)
FOR THE CORNER STANDS (16 REQUIRED) FOR THE FULCRUM & LC STANDS (10 REQUIRED) 5/8 DIA X 6" STUD TYPE ANCHORS DRILL DIA 5/8", DRILL DEPTH 3 1/2"

ANCHOR DETAIL

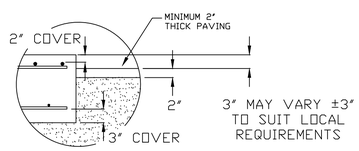

"DETAIL A"

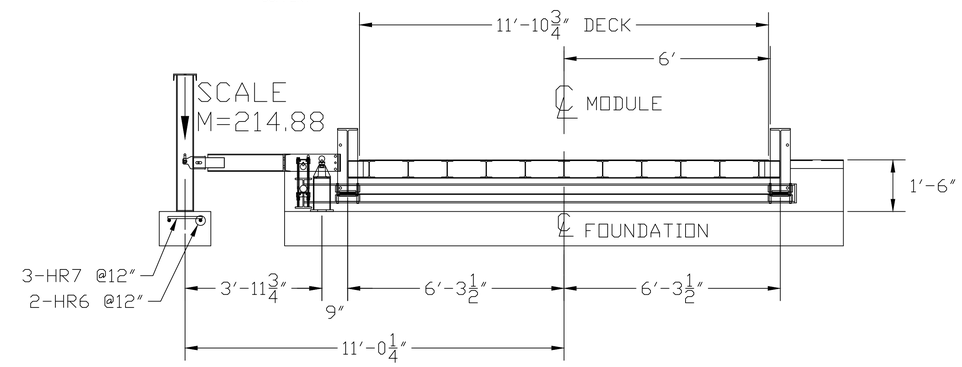

SECTION A-A

NOTES:

1. FOUNDATION DESIGN IS BASED ON A MINIMUM SOIL BEARING CAPACITY OF 3000 LB/SQ. FT. FOR SOIL CONDITIONS WHICH DO NOT MEET THIS SPECIFICATION, CONSULT WITH THE THURMAN SCALE COMPANY.
2. THE FOUNDATION SHALL BE INSTALLED AT AN ELEVATION AND LOCATION TO INSURE ADEQUATE DRAINAGE AWAY FROM SCALE. A PERIMETER TRENCH AND AGGREGATE BASE MAY BE ADDED IF DRAINAGE IS NOT SUFFICIENT TO MAINTAIN 3000 LB/SQ. FT. BEARING CAPACITY.
3. BOTTOM OF FOOTERS SHOULD EXTEND BELOW THE FROST LINE. AN 18 INCH FOOTER DEPTH IS MINIMUM.
4. N.I.S.T. H-44 REQUIREMENTS AND LOCAL WEIGHTS AND MEASURES REGULATIONS MAY REQUIRE INSTALLATION PARAMETERS SOMEWHAT DIFFERENT THAN ILLUSTRATED ON THIS PLAN. IN ORDER TO INSURE COMPLIANCE, CONSULT THE LOCAL WEIGHTS & MEASURES OFFICE PRIOR TO CONSTRUCTION.
5. CONCRETE OF 4000 PSI MINIMUM COMPRESSIVE STRENGTH IS REQUIRED, WITH 5-7% AIR ENTRAINMENT. VIBRATE CONCRETE WHEN POURING. FOLLOW LATEST ACI REQUIREMENTS FOR MATERIALS AND CONSTRUCTION. DO NOT CAST UNLESS TEMPERATURE IS ABOVE 40 DEGREES FAHRENHEIT.
6. PIERS MUST BE LEVEL AND IN THE SAME PLANE WITHIN ±1/8 INCH.
7. EXCAVATION, FORMS, REINFORCING STEEL, GUARD POSTS, AND CONCRETE FURNISHED BY OTHERS.
8. DO NOT PLACE REBAR IN CLOSE PROXIMITY OF ANCHOR BOLTS.

FOUNDATION REINFORCING SCHEDULE
ASTM 615 – GRADE 60

MARK	QTY	SIZE	LENGTH	WEIGHT (LBS)	COMMENT
HR1	32	#4	9'-6"	204	LONG. EA. APPROACH
HR2	96	#4	15'-9"	1011	LAT. EA. APPROACH; PIER
HR3	128	#4	3'-0"	257	LONG. EA. PIER
HR4	2	#4	10'-0"	14	LONG. DUAL FULCRUM PIER
HR5	12	#4	1'-4"	11	LAT. EA. FULCRUM PIER
HR6	6	#4	2'-0"	9	LONG. EA. FULCRUM PIER; LC PIER
HR7	3	#4	1'-0"	2	LAT. LOAD CELL PIER
VR1	64	#4	2'-8"	114	VERT. EA. END WALL
			TOTAL WEIGHT	1,622	

FOUNDATION CONCRETE
4000 PSI MINIMUM

LOCATION	QTY (CU. YDS)
PIERS AS SHOWN	14.5
FLOOR AT 2" THICK	6.9
APPROACHES	9.5
OPTIONAL APPROACH SUPPORTS	2.9
TOTAL CONCRETE	33.7

REINFORCING STEEL NOTES:

1. REINFORCING STEEL SHALL BE FREE OF ALL MUD, DEBRIS, CEMENT GROUT, LOOSE RUST, GREASE, AND OIL.
2. TACK WELDING OF BARS IS PROHIBITED.

THIS DRAWING IS SUPPLIED AS CHECKED BELOW:
☒ REFERENCE (ESTIMATES ONLY, NOT FOR CONSTRUCTION)
☐ CERTIFIED FOR CONSTRUCTION, THURMAN SERIAL#
CUSTOMER:
CUSTOMER P.O.# DATE:
☐ CUSTOMER APPROVAL, RETURN ONE COPY.
(ORDER ON HOLD UNTIL SIGNED COPY IS RETURNED)
☐ APPROVED AS DRAWN, APPROVED BY: DATE:
☐ APPROVED AS NOTED, APPROVED BY: DATE:

THE MATERIAL AND INFORMATION CONTAINED HEREIN IS CONFIDENTIAL AND IS THE PROPERTY OF THURMAN SCALE COMPANY AND IS NOT TO BE USED, DISCLOSED, COPIED, TRANSFERRED, OR REPRODUCED WITHOUT THE PRIOR WRITTEN PERMISSION OF THURMAN SCALE COMPANY.

UNLESS OTHERWISE SPECIFIED:
DIMENSIONS ARE IN INCHES
TOLERANCES: FRACTIONS ±1/8"
ANGLES ±1°
3-PLACE DECIMAL ±0.005
2-PLACE DECIMAL ±0.05
HOLE DIAMETERS ±1/32"

MATERIAL	FINISH
A36	N/A

LET	BY	DATE	REVISION
1	JCR	03/20/15	CHANGED TO TWO 25' SPANS (VAS & 30' SPANS); UPDATED CONCRETE/REBAR SCHEDULES

THURMAN SCALE
COLUMBUS, OH

8140 60K CLC
80' X 12' FOOTINGS
FOUNDATION (4 SECTION)

DATE 10/26/12
SCALE: N/A SHEET 1 OF 1
DRAWN BY: JCR
CHECKED BY:
APPROVED BY:
MODEL:
DRAWING NUMBER: 92543-FT
REVISION: 1

Illustrative purposes only. Not for Construction.